پیشتاز تامین تجهیز غرب

نماینده رسمی و تخصصی رله و حفاظت اشنایدر الکتریک

Sepam

Protection Relays

MiCOM

Sepam

VAMP

24 Months Warranty
by Schneider Electric
IRAN

System integrator
of
Schneider Electric

System integrator
of
Schneider Electric

شرکت **پیشتاز تامین تجهیز غرب** بعنوان System Integrator مورد تایید **اشنایدرالکتریک** با تکیه بر تجارب مدیران و کارشناسان فنی و فروش، بیش از یک دهه مفتخر به تامین قطعات و ارائه خدمات فنی به پروژه های نفت وگاز و صنایع بزرگ دولتی و خصوصی، قطعات یدکی صنایع مادر و شبکه‌های توزیع برق کشور می‌باشد.

باتوجه به گسترش محصولات **اشنایدر الکتریک** در زمینه حفاظت شبکه های قدرت، راهکارهای حفاظتی ما تمامی صنایع از جمله نفت و گاز، صنایع فلزات، نیروگاه‌ها، پست‌های انتقال و توزیع، خطوط ریلی و ... را دربر می گیرد.

پیشتاز تامین تجهیز غرب
نماینده رسمی و تخصصی رله و حفاظت اشنایدر الکتریک

Selection guide for all applications

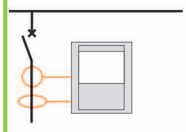

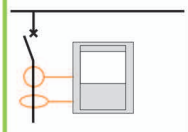

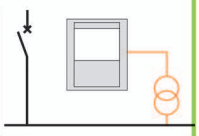

		series 10			series 20			
Protections								
Current		■	■	■	■	■		
Voltage							■	■
Frequency							■	■
Specifics		phase and earth fault overcurrent	phase and earth fault overcurrent	earth fault overcurrent		breaker failure		disconnection by rate of change of frequency
Applications								
Substation P. 18		A	B	N	S20	S24		
Busbar P. 20							B21	B22
Transformer P. 22		A	B	N	T20	T24		
Motor P. 28					M20			
Generator P. 32								
Capacitor P. 36								
Characteristics								
Logic inputs/ outputs	Inputs	4	0	0	0 to 10		0 to 10	
	Outputs	7	3	3	4 to 8		4 to 8	
Temperature sensors					0 to 8		0 to 8	
Channel	Current	3I + Io	3I + Io	Io	3I + Io			
	Voltage						3V + Vo	
	LPCT (1)				Yes			
Communication ports		1			1 to 2		1 to 2	
IEC61850 Protocol					Yes		Yes	
	Redudancy							
	Goose message							
Control	Matrix (2)				Yes		Yes	
	Logic equation editor							
	Logipam (3)							
Other	Backup	Lithium battery (4)						
	Front Memory cartridge with settings							

(1) LPCT: low-power current transducer complying with standard IEC 60044-8.
(2) Control matrix for simple assignment of information from the protection, control and monitoring functions.
(3) Logipam ladder language (PC programming environment) to make full use of Sepam series 80 functions.
(4) Standard lithium battery 1/2 AA format 3.6 V front face exchangeable.

Selection guide for all applications

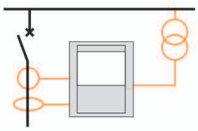

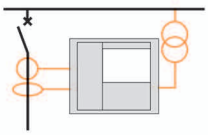

		series 40					series 60		
Protections									
Current		■	■	■	■	■	■	■	■
Voltage		■	■	■		■	■	■	■
Frequency		■	■	■		■	■	■	■
Specifics			directional earth fault	directional earth fault and phase overcurrent	directional earth fault			directional earth fault	directional earth fault and phase overcurrent
Applications									
Substation P. 18		S40	S41	S42	S43	S44	S60		S62
		S50[5]	S51[5]	S52[5]	S53[5]	S54[5]			
Busbar P. 20									
Transformer P. 22		T40		T42			T60		T62
		T50[6]		T52[6]					
Motor P. 28		M40	M41					M61	
Generator P. 32		G40					G60		G62
Capacitor P. 36							C60		
Characteristics									
Logic inputs/ outputs	Inputs	0 to 10					0 to 28		
	Outputs	4 to 8					4 to 16		
Temperature sensors		0 to 16					0 to 16		
Channel	Current	3I + Io					3I + Io		
	Voltage	3V, 2U + Vo					3V, 2U + Vo or Vnt		
	LPCT[1]	Yes					Yes		
Communication ports		1 to 2					1 to 2		
IEC61850 Protocol		Yes					Yes		
	Redudancy	Yes					Yes		
	Goose message						Yes		
Control	Matrix[2]	Yes					Yes		
	Logic equation editor	Yes					Yes		
	Logipam[3]								
Other	Backup	48 hours					Lithium battery[4]		
	Front Memory cartridge with settings						Standard cartridge		

(1) LPCT: low-power current transducer complying with standard IEC 60044-8.
(2) Control matrix for simple assignment of information from the protection, control and monitoring functions.
(3) Logipam ladder language (PC programming environment) to make full use of Sepam series 80 functions.
(4) Standard lithium battery 1/2 AA format 3.6 V front face exchangeable.

پیشتاز تامین تجهیز غرب
نماینده رسمی و تخصصی رله و حفاظت اشنایدر الکتریک

Selection guide for all applications

series 80

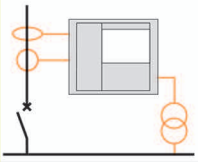
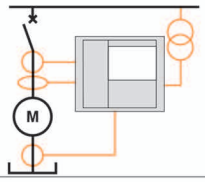

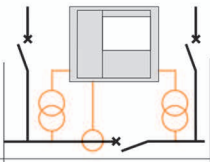
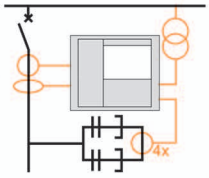

■	■	■	■	■	■	■	■
■	■	■	■	■	■	■	■
■	■	■	■	■	■	■	■
	directional earth fault	directional earth fault and phase overcurrent	disconnection by rate of change of frequency	transformer & transformer-machine unit differential	machine differential	voltage and frenquency protection for 2 sets of busbars	capacitor-bank unbalance
S80	S81	S82	S84				
B80						B83	
	T81	T82		T87			
	M81			M88	M87		
		G82		G88	G87		
							C86
0 to 42				0 to 42		0 to 42	0 to 42
5 to 23				5 to 23		5 to 23	5 to 23
0 to 16				0 to 16		0 to 16	0 to 16
3I + 2 x Io				2 x 3I + 2 x Io		3I + Io	2 x 3I + 2 x Io
3V + Vo				3V + Vo		2 x 3V + 2 x Vo	3V + Vo
Yes				Yes		Yes	Yes
2 to 4				2 to 4		2 to 4	2 to 4
Yes				Yes		Yes	Yes
Yes				Yes		Yes	Yes
Yes				Yes		Yes	Yes
Yes				Yes		Yes	Yes
Yes				Yes		Yes	Yes
Yes				Yes		Yes	Yes
Lithium battery(4)				Lithium battery(4)		Lithium battery(4)	Lithium battery(4)
Standard or extended cartridge				Standard or extended cart.		Standard or extended cart.	Standard or extended cart.

(5) S5X applications are identical to S4X applications with the following additional functions:
■ earth fault and phase overcurrent cold load pick-up,
■ broken wire detection,
■ fault locator.
(6) T5X applications are identical to T4X applications with the following additional functions:
■ earth fault and phase overcurrent cold load pick-up
■ broken wire detection.

System integrator of Schneider Electric

Selection table Sepam series 20

		Substation		Transformer		Motor	Busbar	
Protection	**ANSI code**	**S20**	**S24 (4)**	**T20**	**T24 (4)**	**M20**	**B21 (3)**	**B22**
Phase overcurrent	50/51	4	4	4	4	4		
Phase overcurrent cold load pick-up/blocking	CLPU 50/51		1		1			
Earth fault / Sensitive earth fault	50N/51N 50G/51G	4	4	4	4	4		
Earth fault cold load pick-up/blocking	CLPU 50/51N		1		1			
Breaker failure	50BF		1		1			
Negative sequence / unbalance	46	1	1	1	1	1		
Thermal overload	49RMS			2	2	2		
Phase undercurrent	37					1		
Excessive starting time, locked rotor	48/51LR/14					1		
Starts per hour	66					1		
Positive sequence undervoltage	27D/47						2	2
Remanent undervoltage	27R						1	1
Phase-to-phase undervoltage	27						2	2
Phase-to-neutral undervoltage	27S						1	1
Phase-to-phase overvoltage	59						2	2
Neutral voltage displacement	59N						2	2
Overfrequency	81H						1	1
Underfrequency	81L						2	2
Rate of change of frequency	81R							1
Recloser (4 cycles)	79	□	□					
Thermostat / Buchholz	26/63			□	□			
Temperature monitoring (8 RTDs)	38/49T			□	□	□		
Metering								
Phase current I1, I2, I3 RMS, residual current I0		■	■	■	■	■		
Demand current I1, I2, I3, peak demand current IM1, IM2, IM3		■	■	■	■	■		
Voltage U21, U32, U13, V1, V2, V3, residual voltage V0							■	■
Positive sequence voltage Vd / rotation direction							■	■
Frequency							■	■
Temperature				□	□	□		
Network and machine diagnosis								
Tripping current TripI1, TripI2, TripI3, TripI0		■	■	■	■	■		
Unbalance ratio / negative sequence current Ii		■	■	■	■	■		
Disturbance recording		■	■	■	■	■	■	■
Thermal capacity used				■	■	■		
Remaining operating time before overload tripping				■	■	■		
Waiting time after overload tripping				■	■	■		
Running hours counter / operating time				■	■	■		
Starting current and time						■		
Start inhibit time Number of starts before inhibition						■		
Cable arcing fault detection		■	■	■	■	■	■	■
Switchgear diagnosis								
Cumulative breaking current		■	■	■	■	■		
Trip circuit supervision		□	□	□	□	□	□	□
Number of operations, operating time, charging time		□	□	□	□	□		
Control and monitoring	**ANSI code**							
Circuit breaker / contactor control (1)	94/69	□	□	□	□	□	□	□
Latching / acknowledgement	86	■	■	■	■	■	■	■
Logic discrimination	68	□	□	□	□	□		
Switching of groups of settings		■ (2)	■ (2)	■ (2)	■ (2)	■ (2)		
Annunciation	30	■	■	■	■	■	■	■
Additional modules								
8 temperature sensor inputs - MET148-2 module				□	□	□		
1 low level analog output - MSA141 module		□	□	□	□	□	□	□
Logic inputs/outputs - MES114/MES114E/MES114F (10I/4O) module		□	□	□	□	□	□	□
Communication interface - ACE949-2, ACE959, ACE937, ACE969TP-2, ACE969FO-2, ECI850		□	□	□	□	□	□	□

■ *standard,* □ *according to parameter setting and MES114/MES114E/MES114F or MET148-2 input/output module options.*
(1) *For shunt trip unit or undervoltage trip unit.*
(2) *Exclusive choice between logic discrimination and switching from one 2-relay group of settings to another 2-relay group.*
(3) *Performs Sepam B20 functions.*
(4) *Applications S24 and T24 perform the functions of applications S23 and T23 respectively.*

پیشتاز تامین تجهیز غرب
نماینده رسمی و تخصصی رله و حفاظت اشنایدر الکتریک

Selection table
Sepam series 40

		Substation										Transformer				Motor		Generator
Protection	**ANSI code**	**S40**	**S50**	**S41**	**S51**	**S42**	**S52**	**S43**	**S53**	**S44**	**S54**	**T40**	**T50**	**T42**	**T52**	**M40**	**M41**	**G40**
Phase overcurrent	50/51	4	4	4	4	4	4	4	4	4	4	4	4	4	4	4	4	4
Phase overcurrent cold load pick-up / blocking	CLPU 50/51		4		4		4		4		4		4		4			
Voltage-restrained overcurrent	50V/51V																	1
Earth fault / Sensitive earth fault	50N/51N 50G/51G	4	4	4	4	4	4	4	4	4	4	4	4	4	4	4	4	4
Earth fault cold load pick-up / blocking	CLPU 50/51N		4		4		4		4		4		4		4			
Breaker failure	50BF	1	1	1	1	1	1	1	1	1	1	1	1	1	1	1	1	1
Negative sequence / unbalance	46	2	2	2	2	2	2	2	2	2	2	2	2	2	2	2	2	2
Directional phase overcurrent	67					2	2							2	2			
Directional earth fault	67N/67NC			2	2	2	2	2	2					2	2		2	
Directional active overpower	32P			1	1	1	1	1	1								1	1
Directional reactive overpower	32Q/40																1	1
Thermal overload	49RMS											2	2	2	2	2	2	2
Phase undercurrent	37															1	1	
Excessive starting time, locked rotor	48/51LR/14															1	1	
Starts per hour	66															1	1	
Positive sequence undervoltage	27D															2	2	
Remanent undervoltage	27R															1	1	
Undervoltage [3]	27/27S	2	2	2	2	2	2			2	2	2	2	2	2	2	2	2
Overvoltage [3]	59	2	2	2	2	2	2			2	2	2	2	2	2	2	2	2
Neutral voltage displacement	59N	2	2	2	2	2	2					2	2	2	2		2	2
Negative sequence overvoltage	47	1	1	1	1	1	1			1	1	1	1	1	1		1	1
Overfrequency	81H	2	2	2	2	2	2					2	2	2	2		2	2
Underfrequency	81L	4	4	4	4	4	4					4	4	4	4		4	4
Recloser (4 cycles)	79	□	□	□	□	□	□	□	□	□	□							
Temperature monitoring (8 or 16 RTDs)	38/49T											□	□	□	□	□	□	□
Thermostat / Buchholz	26/63											□		□				
Broken conductor	46BC		1		1		1		1		1		1		1			
Metering																		
Phase current I1, I2, I3 RMS, residual current I0		■	■	■	■	■	■	■	■	■	■	■	■	■	■	■	■	■
Demand current I1, I2, I3, peak demand current IM1, IM2, IM3		■	■	■	■	■	■	■	■	■	■	■	■	■	■	■	■	■
Voltage U21, U32, U13, V1, V2, V3, residual voltage V0		■	■	■	■	■	■	■	■	■	■	■	■	■	■	■	■	■
Positive sequence voltage Vd / rotation direction Negative sequence voltage Vi		■	■	■	■	■	■	■	■	■	■	■	■	■	■	■	■	■
Frequency		■	■	■	■	■	■	■	■	■	■	■	■	■	■	■	■	■
Active, reactive and apparent power P, Q, S Peak demand power PM, QM, power factor		■	■	■	■	■	■	■	■	■	■	■	■	■	■	■	■	■
Calculated active and reactive energy (±W.h, ±var.h)		■	■	■	■	■	■	■	■	■	■	■	■	■	■	■	■	■
Active and reactive energy by pulse counting (±W.h, ±.varh)		□	□	□	□	□	□	□	□	□	□	□	□	□	□	□	□	□
Temperature												□	□	□	□	□	□	□
Network and machine diagnosis																		
Tripping context		■	■	■	■	■	■	■	■	■	■	■	■	■	■	■	■	■
Tripping current TripI1, TripI2, TripI3, TripI0		■	■	■	■	■	■	■	■	■	■	■	■	■	■	■	■	■
Unbalance ratio / negative sequence current Ii		■	■	■	■	■	■	■	■	■	■	■	■	■	■	■	■	■
Phase displacement Φ0, Φ1, Φ2, Φ3		■	■	■	■	■	■	■	■	■	■	■	■	■	■	■	■	■
Disturbance recording		■	■	■	■	■	■	■	■	■	■	■	■	■	■	■	■	■
Thermal capacity used												■	■	■	■	■	■	■
Remaining operating time before overload tripping												■	■	■	■	■	■	■
Waiting time after overload tripping												■	■	■	■	■	■	■
Running hours counter / operating time												■	■	■	■	■	■	■
Starting current and time																■	■	
Cable arcing fault detection		■	■	■	■	■	■	■	■	■	■	■	■	■	■	■	■	■
Fault locator	21FL		■		■		■		■		■							
Start inhibit time, number of starts before inhibition																■	■	
Switchgear diagnosis																		
Cumulative breaking current		■	■	■	■	■	■	■	■	■	■	■	■	■	■	■	■	■
Trip circuit supervision		□	□	□	□	□	□	□	□	□	□	□	□	□	□	□	□	□
Number of operations, operating time, charging time		□	□	□	□	□	□	□	□	□	□	□	□	□	□	□	□	□
CT / VT supervision	60FL	■	■	■	■	■	■	■	■	■	■	■	■	■	■	■	■	■
Control and monitoring	**ANSI code**																	
Circuit breaker / contactor control [1]	94/69	■	■	■	■	■	■	■	■	■	■	■	■	■	■	■	■	■
Latching / acknowledgement	86	■	■	■	■	■	■	■	■	■	■	■	■	■	■	■	■	■
Logic discrimination	68	□	□	□	□	□	□	□	□	□	□	□	□	□	□	□	□	□
Switching of groups of settings		■	■	■	■	■	■	■	■	■	■	■	■	■	■	■	■	■
Annunciation	30	■	■	■	■	■	■	■	■	■	■	■	■	■	■	■	■	■
Logic equation editor		■	■	■	■	■	■	■	■	■	■	■	■	■	■	■	■	■
Additional modules																		
8 temperature sensor inputs - MET148-2 module [2]												□	□	□	□	□	□	□
1 low level analog output - MSA141 module		□	□	□	□	□	□	□	□	□	□	□	□	□	□	□	□	□
Logic inputs/outputs - MES114/MES114E/MES114F (10I/4O) module		□	□	□	□	□	□	□	□	□	□	□	□	□	□	□	□	□
Communication interface - ACE949-2, ACE959, ACE937, ACE969TP-2, ACE969FO-2 , ACE850 TP, ACE850FO or ECI850		□	□	□	□	□	□	□	□	□	□	□	□	□	□	□	□	□

■ *standard,* □ *according to parameter setting and MES114/MES114E/MES114F or MET148-2 input/output module options.*
(1) *For shunt trip unit or undervoltage trip unit.*
(2) *2 modules possible.*
(3) *Exclusive choice, phase-to-neutral voltage or phase-to-phase voltage for each of the 2 relays.*

Sepam series 60

Selection table

		Substation		Transformer		Motor	Generator		Cap.
Protection	**ANSI code**	**S60**	**S62**	**T60**	**T62**	**M61**	**G60**	**G62**	**C60**
Phase overcurrent (1)	50/51	4	4	4	4	4	4	4	4
Earth fault / Sensitive earth fault (1)	50N/51N 50G/51G	4	4	4	4	4	4	4	4
Breaker failure	50BF	1	1	1	1	1	1	1	1
Negative sequence / unbalance	46	2	2	2	2	2	2	2	2
Thermal overload for cables	49RMS		1						
Thermal overload for machines (1)	49RMS			2	2	2	2	2	
Thermal overload for capacitors	49RMS								1
Restricted earth fault	64REF			2	2				
Directional phase overcurrent (1)	67		2		2			2	
Directional earth fault (1)	67N/67NC		2		2	2		2	
Directional active overpower	32P		2		2	2	2	2	
Directional reactive overpower	32Q					1	1	1	
Directional active underpower	37P						2	2	
Phase undercurrent	37					1			
Excessive starting time, locked rotor	48/51LR/14					1			
Starts per hour	66					1			
Field loss (underimpedance)	40					1	1	1	
Overspeed (2 set points) (2)	12					□	□	□	
Underspeed (2 set points) (2)	14					□	□	□	
Voltage-restrained overcurrent	50V/51V						1	1	
Underimpedance	21B						1	1	
Undervoltage (L-L or L-N)	27	2	2	2	2	2	2	2	2
Positive sequence undervoltage	27D	2	2	2	2	2	2	2	2
Remanent undervoltage	27R	2	2	2	2	2	2	2	2
Overvoltage (L-L or L-N)	59	2	2	2	2	2	2	2	2
Neutral voltage displacement	59N	2	2	2	2	2	2	2	2
Negative sequence overvoltage	47	2	2	2	2	2	2	2	2
Overfrequency	81H	2	2	2	2	2	2	2	2
Underfrequency	81L	4	4	4	4	4	4	4	4
Rate of change of frequency	81R	2	2				2	2	
Recloser (4 cycles) (2)	79	□	□						
Thermostat / Buchholz (2)	26/63			□	□	□	□	□	
Temperature monitoring (16 RTDs) (3)	38/49T			□	□	□	□	□	□
Synchro-check (4)	25	□	□	□	□		□	□	
Control and monitoring									
Circuit breaker / contactor control (2)	94/69	□	□	□	□	□	□	□	□
Automatic transfer (AT) (2)		□	□	□	□		□	□	
Load shedding / automatic restart (2)						□			
De-excitation (2)							□	□	
Genset shutdown (2)							□	□	
Logic discrimination (2)	68	□	□	□	□	□	□	□	□
Latching / acknowledgement	86	■	■	■	■	■	■	■	■
Annunciation	30	■	■	■	■	■	■	■	■
Switching of groups of settings		■	■	■	■	■	■	■	■
Adaptation using logic equations		■	■	■	■	■	■	■	■

The figures indicate the number of relays available for each protection function.
■ standard, □ options.
***(1)** Protection functions with 2 groups of settings.*
***(2)** According to parameter setting and optional MES120 input/output modules.*
***(3)** With optional MET148-2 temperature input modules.*
***(4)** With optional MCS025 synchro-check module.*

پیشتاز تامین تجهیز غرب
نماینده رسمی و تخصصی رله و حفاظت اشنایدر الکتریک

Selection table

	Substation		Transformer		Motor	Generator		Cap.
Metering	**S60**	**S62**	**T60**	**T62**	**M61**	**G60**	**G62**	**C60**
Phase current I1, I2, I3 RMS	■	■	■	■	■	■	■	■
Residual current Io, sum Io	■	■	■	■	■	■	■	■
Demand current I1, I2, I3	■	■	■	■	■	■	■	■
Peak demand current IM1, IM2, IM3	■	■	■	■	■	■	■	■
Voltage U21, U32, U13, V1, V2, V3	■	■	■	■	■	■	■	■
Residual voltage V0	■	■	■	■	■	■	■	■
Positive sequence voltage Vd / rotation direction	■	■	■	■	■	■	■	■
Negative sequence voltage Vi	■	■	■	■	■	■	■	■
Frequency	■	■	■	■	■	■	■	■
Active power P, P1, P2, P3	■	■	■	■	■	■	■	■
Reactive power Q, Q1, Q2, Q3	■	■	■	■	■	■	■	■
Apparent power S, S1, S2, S3	■	■	■	■	■	■	■	■
Peak demand power PM, QM	■	■	■	■	■	■	■	■
Power factor	■	■	■	■	■	■	■	■
Calculated active and reactive energy (±Wh, ±VARh)	■	■	■	■	■	■	■	■
Active and reactive energy by pulse counting [2] (± Wh, ± VARh)	□	□	□	□	□	□	□	□
Temperature (16 RTDs) [3]			□	□	□	□	□	
Rotation speed [2]					□	□	□	
Network and machine diagnosis								
Tripping context	■	■	■	■	■	■	■	■
Tripping current Trip I1, Trip I2, Trip I3, Trip Io	■	■	■	■	■	■	■	■
Phase fault and earth fault trip counters	■	■	■	■	■	■	■	■
Unbalance ratio / negative sequence current Ii	■	■	■	■	■	■	■	■
Harmonic distortion (THD)	■	■	■	■	■	■	■	■
Current and voltage Ithd, Uthd	■	■	■	■	■	■	■	■
Phase displacement φ1, φ2, φ3	■	■	■	■	■	■	■	■
Disturbance recording recorded	■	■	■	■	■	■	■	■
Motor start report (MSR)					■			
Motor start trend (MST)					■			
Data log (DLG)	■	■	■	■	■	■	■	■
Thermal capacity used		■	■	■	■	■	■	■
Remaining operating time before overload tripping		■	■	■	■	■	■	■
Waiting time after overload tripping		■	■	■	■	■	■	■
Running hours counter / operating time			■	■	■	■	■	■
Starting current and time					■			
Start inhibit time					■			
Number of starts before inhibition					■			
Cable arcing fault detection	■	■	■	■	■	■	■	■
Apparent positive sequence impedance Zd	■	■	■	■	■	■	■	■
Apparent phase-to-phase impedances Z21, Z32, Z13	■	■	■	■	■	■	■	■
Third harmonic voltage, neutral point or residual						■	■	
Difference in amplitude, frequency and phase of voltages compared for synchro-check [4]	□	□	□	□		□	□	
Switchgear diagnosis	**ANSI code**							
CT / VT supervision	60/60FL	■	■	■	■	■	■	■	■
Trip circuit supervision [2]	74	□	□	□	□	□	□	□	□
Cumulative breaking current		■	■	■	■	■	■	■	■
Number of operations, operating time, charging time, number of racking out operations [2]		□	□	□	□	□	□	□	□
Additional modules								
8 temperature sensor inputs - MET148-2 module [2]				□	□	□	□	□	□
1 low level analog output - MSA141 module		□	□	□	□	□	□	□	□
Logic inputs/outputs - MES120/MES120G/MES120H (14I/6O) module		□	□	□	□	□	□	□	□
Communication interface - ACE949-2, ACE959, ACE937, ACE969TP-2, ACE969FO- 2, ECI850, ACE850TP or ACE850FO		□	□	□	□	□	□	□	□

■ *standard,* □ *options.*
(2) *According to parameter setting and optional MES120 input/output modules.*
(3) *With optional MET148-2 temperature input modules.*
(4) *With optional MCS025 synchro-check module.*

Selection table

System integrator of Schneider Electric

		Substation				Transformer			Motor			Generator			Busbar		Cap.
Protection	**ANSI code**	**S80**	**S81**	**S82**	**S84**	**T81**	**T82**	**T87**	**M81**	**M87**	**M88**	**G82**	**G87**	**G88**	**B80**	**B83**	**C86**
Phase overcurrent (1)	50/51	8	8	8	8	8	8	8	8	8	8	8	8	8	8	8	8
Earth fault / Sensitive earth fault (1)	50N/51N 50G/51G	8	8	8	8	8	8	8	8	8	8	8	8	8	8	8	8
Breaker failure	50BF	1	1	1	1	1	1	1	1	1	1	1	1	1	1	1	1
Negative sequence / unbalance	46	2	2	2	2	2	2	2	2	2	2	2	2	2	2	2	2
Thermal overload for cables	49RMS		1	1	1												
Thermal overload for machines (1)	49RMS					2	2	2	2	2	2	2	2	2			
Thermal overload for capacitors	49RMS																1
Capacitor bank unbalance	51C																8
Restricted earth fault	64REF					2	2	2				2		2			
Two-winding transformer differential	87T							1			1			1			
Machine differential	87M									1			1				
Directional phase overcurrent (1)	67			2	2		2	2				2	2	2			
Directional earth fault (1)	67N/67NC		2	2	2	2	2	2	2	2	2	2	2	2			
Directional active overpower	32P		2	2	2	2	2	2	2	2	2	2	2	2			
Directional reactive overpower	32Q								1	1	1	1	1	1			
Directional active underpower	37P				2							2					
Phase undercurrent	37								1	1	1						
Excessive starting time, locked rotor	48/51LR								1	1	1						
Starts per hour	66								1	1	1						
Field loss (underimpedance)	40								1	1	1	1	1	1			
Pole slip	78PS								1	1	1	1	1	1			
Overspeed (2 set points) (2)	12								□	□	□	□	□	□			
Underspeed (2 set points) (2)	14								□	□	□	□	□	□			
Voltage-restrained overcurrent	50V/51V											2	2	2			
Underimpedance	21B											1	1	1			
Inadvertent energization	50/27											1	1	1			
Third harmonic undervoltage / 100 % stator earth fault	27TN/64G2 64G											2	2	2			
Overfluxing (V / Hz)	24							2				2	2	2			
Undervoltage (L-L or L-N)	27	4	4	4	4	4	4	4	4	4	4	4	4	4	4	4	4
Positive sequence undercurrent	27D	2	2	2	2	2	2	2	2	2	2	2	2	2	2	2	2
Remanent undervoltage	27R	2	2	2	2	2	2	2	2	2	2	2	2	2	2	2	2
Overvoltage (L-L or L-N)	59	4	4	4	4	4	4	4	4	4	4	4	4	4	4	4	4
Neutral voltage displacement	59N	2	2	2	2	2	2	2	2	2	2	2	2	2	2	2	2
Negative sequence overvoltage	47	2	2	2	2	2	2	2	2	2	2	2	2	2	2	2	2
Overfrequency	81H	2	2	2	2	2	2	2	2	2	2	2	2	2	2	2	2
Underfrequency	81L	4	4	4	4	4	4	4	4	4	4	4	4	4	4	4	4
Rate of change of frequency	81R				2												
Recloser (4 cycles) (2)	79	□	□	□	□												
Thermostat / Buchholz (2)	26/63					□	□	□	□		□	□		□			
Temperature monitoring (16 RTDs) (3)	38/49T					□	□	□	□	□	□	□	□	□			□
Synchro-check (4)	25	□	□	□	□	□	□	□				□	□	□	□	□	
Control and monitoring																	
Circuit breaker / contactor control	94/69	□	□	□	□	□	□	□	□	□	□	□	□	□	□	□	□
Automatic transfer (AT) (2)		□	□	□	□	□	□	□				□	□	□	□	□	
Load shedding / automatic restart									■	■	■						
De-excitation												■	■	■			
Genset shutdown												■	■	■			
Capacitor step control (2)																	□
Logic discrimination (2)	68	□	□	□	□	□	□	□	□	□	□	□	□	□	□	□	□
Latching / acknowledgement	86	■	■	■	■	■	■	■	■	■	■	■	■	■	■	■	■
Annunciation	30	■	■	■	■	■	■	■	■	■	■	■	■	■	■	■	■
Switching of groups of settings		■	■	■	■	■	■	■	■	■	■	■	■	■	■	■	■
Adaptation using logic equations		■	■	■	■	■	■	■	■	■	■	■	■	■	■	■	■
Logipam programming (Ladder language)		□	□	□	□	□	□	□	□	□	□	□	□	□	□	□	□

The figures indicate the number of relays available for each protection function.
■ standard, □ options.
(1) *Protection functions with 2 groups of settings.*
(2) *According to parameter setting and optional MES120 input/output modules.*
(3) *With optional MET148-2 temperature input modules.*
(4) *With optional MCS025 synchro-check module.*
(5) *With ACE949-2, ACE959, ACE937, ACE969TP-2, ACE969FO-2 or ECI850 communication interface.*
(6) *With ACE850TP or ACE850FO communication interface.*

Selection table

	Substation				Transformer			Motor			Generator			Busbar		Cap.
Metering	S80	S81	S82	S84	T81	T82	T87	M81	M87	M88	G82	G87	G88	B80	B83	C86
Phase current I1, I2, I3 RMS	■	■	■	■	■	■	■	■	■	■	■	■	■	■	■	■
Measured residual current I0, calculated I0Σ	■	■	■	■	■	■	■	■	■	■	■	■	■	■	■	■
Demand current I1, I2, I3	■	■	■	■	■	■	■	■	■	■	■	■	■	■	■	■
Peak demand current IM1, IM2, IM3	■	■	■	■	■	■	■	■	■	■	■	■	■	■	■	■
Measured residual current I'0	■	■	■	■	■	■	■	■	■	■	■	■	■	■		
Voltage U21, U32, U13, V1, V2, V3	■	■	■	■	■	■	■	■	■	■	■	■	■	■	■	■
Residual voltage V0	■	■	■	■	■	■	■	■	■	■	■	■	■	■	■	■
Positive sequence voltage Vd / rotation direction	■	■	■	■	■	■	■	■	■	■	■	■	■	■	■	■
Negative sequence voltage Vi	■	■	■	■	■	■	■	■	■	■	■	■	■	■	■	■
Frequency	■	■	■	■	■	■	■	■	■	■	■	■	■	■	■	■
Active power P, P1, P2, P3	■	■	■	■	■	■	■	■	■	■	■	■	■	■	■	■
Reactive power Q, Q1, Q2, Q3	■	■	■	■	■	■	■	■	■	■	■	■	■	■	■	■
Apparent power S, S1, S2, S3	■	■	■	■	■	■	■	■	■	■	■	■	■	■	■	■
Peak demand power PM, QM	■	■	■	■	■	■	■	■	■	■	■	■	■	■	■	■
Power factor	■	■	■	■	■	■	■	■	■	■	■	■	■	■	■	■
Calculated active and reactive energy (±Wh, ±VARh)	■	■	■	■	■	■	■	■	■	■	■	■	■	■	■	■
Active and reactive energy by pulse counting [2] (± Wh, ± VARh)	□	□	□	□	□	□	□	□	□	□	□	□	□	□	□	□
Phase current I'1, I'2, I'3 RMS							■		■	■		■	■			
Calculated residual current I'0Σ							■		■	■		■	■			
Voltage U'21, V'1 and frequency														■		
Voltage U'21, U'32, U'13, V'1, V'2, V'3, V'd, V'i and frequency															■	
Residual voltage V'0															■	
Temperature (16 RTDs) [3]					□	□	□	□	□	□	□	□	□			□
Rotation speed [2]								□	□	□	□	□	□			
Neutral point voltage Vnt								■	■	■	■	■	■			
Network and machine diagnosis																
Tripping context	■	■	■	■	■	■	■	■	■	■	■	■	■	■	■	■
Tripping current TripI1, TripI2, TripI3	■	■	■	■	■	■	■	■	■	■	■	■	■	■	■	■
Phase fault and earth fault trip counters	■	■	■	■	■	■	■	■	■	■	■	■	■	■	■	■
Unbalance ratio / negative sequence current Ii	■	■	■	■	■	■	■	■	■	■	■	■	■	■	■	■
Harmonic distortion (THD), current and voltage Ithd, Uthd	■	■	■	■	■	■	■	■	■	■	■	■	■	■	■	■
Phase displacement φ0, φ'0, φ0Σ	■	■	■	■	■	■	■	■	■	■	■	■	■	■	■	■
Phase displacement φ1, φ2, φ3	■	■	■	■	■	■	■	■	■	■	■	■	■	■	■	■
Disturbance recording	■	■	■	■	■	■	■	■	■	■	■	■	■	■	■	■
Motor start report (MSR)								■	■	■						
Motor start trend (MST)								■	■	■						
Datalog (DLG)	■	■	■	■	■	■	■	■	■	■	■	■	■	■	■	■
Thermal capacity used		■	■	■	■	■	■	■	■	■	■	■	■			■
Remaining operating time before overload tripping		■	■	■	■	■	■	■	■	■	■	■	■			■
Waiting time after overload tripping		■	■	■	■	■	■	■	■	■	■	■	■			■
Running hours counter / operating time					■	■	■	■	■	■	■	■	■			■
Starting current and time								■	■	■						
Start inhibit time								■	■	■						
Number of starts before inhibition								■	■	■						
Unbalance ratio / negative sequence current I'i							■		■	■		■	■			
Differential current Idiff1, Idiff2, Idiff3							■		■	■		■	■			
Through current It1, It2, It3							■		■	■		■	■			
Current phase displacement θ							■		■	■		■	■			
Apparent positive sequence impedance Zd		■	■	■	■	■	■	■	■	■	■	■	■	■	■	■
Apparent phase-to-phase impedances Z21, Z32, Z13		■	■	■	■	■	■	■	■	■	■	■	■	■	■	■
Third harmonic voltage, neutral point or residual											■	■	■			
Difference in amplitude, frequency and phase of voltages compared for synchro-check [4]	□	□	□	□	□	□	□				□	□	□	□	□	
Capacitor unbalance current and capacitance																■
Switchgear diagnosis **ANSI code**																
CT / VT supervision 60/60FL	■	■	■	■	■	■	■	■	■	■	■	■	■	■	■	■
Trip circuit supervision [2] 74	□	□	□	□	□	□	□	□	□	□	□	□	□	□	□	□
Auxiliary power supply monitoring	■	■	■	■	■	■	■	■	■	■	■	■	■	■	■	■
Cumulative breaking current	■	■	■	■	■	■	■	■	■	■	■	■	■	■	■	■
Number of operations, operating time, charging time, number of racking out operations [2]	□	□	□	□	□	□	□	□	□	□	□	□	□	□	□	□
Additional modules																
8 temperature sensor inputs - MET148-2 module [2]					□	□	□	□	□	□	□	□	□	□	□	□
1 low level analog output - MSA141 module	□	□	□	□	□	□	□	□	□	□	□	□	□	□	□	□
Logic inputs/outputs - MES120/MES120G/ MES120H (14I/6O) module	□	□	□	□	□	□	□	□	□	□	□	□	□	□	□	□
Communication interface - ACE949-2, ACE959, ACE937, ACE969-2 TP, FO, ACE850 TP, FO or ECI850	□	□	□	□	□	□	□	□	□	□	□	□	□	□	□	□
Modbus communication, IEC 60 870-5-103, DNP3 or IEC 61850																
Measurement readout [5] [6]	□	□	□	□	□	□	□	□	□	□	□	□	□	□	□	□
Remote indication and time tagging of events [5] [6]	□	□	□	□	□	□	□	□	□	□	□	□	□	□	□	□
Remote control orders [5] [6]	□	□	□	□	□	□	□	□	□	□	□	□	□	□	□	□
Remote protection setting [5]	□	□	□	□	□	□	□	□	□	□	□	□	□	□	□	□
Transfer of disturbance recording data [5] [6]	□	□	□	□	□	□	□	□	□	□	□	□	□	□	□	□
GOOSE message IEC 61850 [6]	□	□	□	□	□	□	□	□	□	□	□	□	□	□	□	□

Officially Guaranteed

24

Month by

Schneider Electric in IRAN

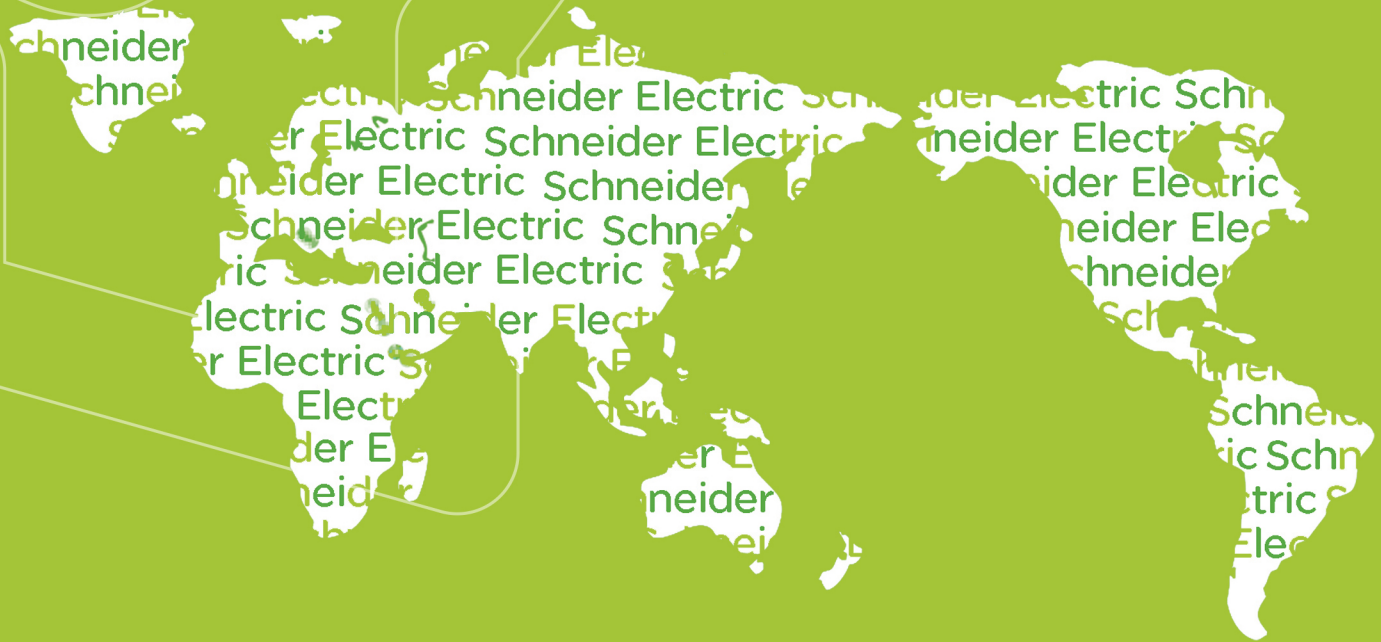

Price structure 2015

Sepam series 10

International range		Type	Reference	DO Price
Sepam series 10N	**1 earth**			
	Standard (0.1…24In0)			
	24…125VDC & 100…120VAC	Sepam series 10N 11A	REL59817	**1,018 €**
	110…250VDC & 100…240VAC	Sepam series 10N 11E	REL59819	**977 €**
	Very sensitive (0.2…24A and 2…240A)			
	24…125VDC & 100…120VAC	Sepam series 10N 13A	REL59818	**936 €**
	110…250VDC & 100…240VAC	Sepam series 10N 13E	REL59820	**895 €**
Sepam series 10B	**2 ph + 1 earth**			
	Standard (0.1…24In0)			
	24…125VDC & 100…120VAC	Sepam series 10B 31A	REL59800	**855 €**
	110…250VDC & 100…240VAC	Sepam series 10B 31E	REL59801	**814 €**
Sepam series 10B	**3 ph + 1 earth**			
	Standard (0.1…24In0)			
	24…125VDC & 100…120VAC	Sepam series 10B 41A	REL59802	**855 €**
	110…250VDC & 100…240VAC	Sepam series 10B 41E	REL59805	**611 €**
	Sensitive (0.01…2.4In0)			
	24…125VDC & 100…120VAC	Sepam series 10B 42A	REL59803	**936 €**
	110…250VDC & 100…240VAC	Sepam series 10B 42E	REL59806	**895 €**
	Very sensitive (0.2…24A and 2…240A)			
	24…125VDC & 100…120VAC	Sepam series 10B 43A	REL59804	**977 €**
	110…250VDC & 100…240VAC	Sepam series 10B 43E	REL59807	**977 €**
Sepam series 10A	**3 ph + 1 earth + comm.**			
	Standard (0.1…24In0)			
	24…125VDC & 100…120VAC	Sepam series 10A 41A	REL59808	**1,368 €**
	110…250VDC & 100…240VAC	Sepam series 10A 41E	REL59811	**1,075 €**
	220…250VDC	Sepam series 10A 41F	REL59814	**1,368 €**
	Sensitive (0.01…2.4In0)			
	24…125VDC & 100…120VAC	Sepam series 10A 42A	REL59809	**1,498 €**
	110…250VDC & 100…240VAC	Sepam series 10A 42E	REL59812	**1,433 €**
	220…250VDC	Sepam series 10A 42F	REL59815	**1,498 €**
	Very sensitive (0.2…24A and 2…240A)			
	24…125VDC & 100…120VAC	Sepam series 10A 43A	REL59810	**1,563 €**
	110…250VDC & 100…240VAC	Sepam series 10A 43E	REL59813	**1,563 €**
	220…250VDC	Sepam series 10A 43F	REL59816	**1,628 €**

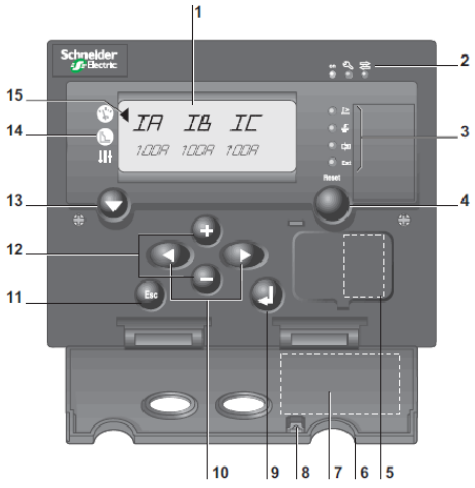

1 Back-lit display
2 Status LEDs
3 Fault LEDs
4 Button for Sepam reset and maximeter reset
5 Battery housing (Sepam series 10 A)
6 Protection cover for settings
7 Identification zone
8 Lead-seal accessory
9 Button for setting selection and confirmation
10 Buttons for selection in a menu
11 Button to cancel entry
12 Buttons for setting adjustments
13 Button for menu selection and LED test
14 Menu pictograms
15 Cursor for menu selection

Price structure 2015

Ready-to-use base unit
Sepam series 20 and Sepam series 40

For cost calculation, you must add:

- **the ready-to-use base unit**
- **the relevant accessories and/or the TCP/IP firmware option (only for series 40).**

Base unit

Basic UMI

Sepam series 20	Application	Type	DO price
	Substation	S20	964 €
		S24	1,228 €
	Transformer	T20	1,120 €
		T24	1,230 €
	Motor	M20	1,229 €
	Busbar	B21	1,039 €
		B22	2,069 €
Sepam series 40			
	Substation	S40	2,060 €
		S41	2,622 €
		S42	3,447 €
		S43	1,915 €
		S44	1,948 €
		S50	2,123 €
		S51	2,720 €
		S52	3,537 €
		S53	2,072 €
		S54	2,032 €
	Transformer	T40	2,244 €
		T42	3,915 €
		T50	2,313 €
		T52	4,081 €
	Motor	M40	2,313 €
		M41	2,864 €
	Generator	G40	2,725 €

Integrated advanced UMI

Sepam series 20	Application	Type	
	Substation	S20	1,076 €
		S24	1,424 €
	Transformer	T20	1,227 €
		T24	1,429 €
	Motor	M20	1,362 €
	Busbar	B21	1,199 €
		B22	2,201 €
Sepam series 40			
	Substation	S40	2,127 €
		S41	2,701 €
		S42	3,488 €
		S43	2,016 €
		S44	2,001 €
		S50	2,245 €
		S51	2,820 €
		S52	3,606 €
		S53	2,272 €
		S54	2,232 €
	Transformer	T40	2,299 €
		T42	4,058 €
		T50	2,407 €
		T52	4,222 €
	Motor	M40	2,406 €
		M41	2,932 €
	Generator	G40	2,799 €

Ready-to-use base unit
Sepam series 60

For price calculation, you must add:

- **the ready-to-use base unit**
- **the relevant accessories and/or the TCP/IP firmware option**

Base unit

Without UMI

Sepam series 60	Application	Type	DO Price
	Substation	S60	**2,575 €**
		S62	**4,354 €**
	Transformer	T60	**3,302 €**
		T62	**4,676 €**
	Motor	M61	**3,526 €**
	Generator	G60	**3,518 €**
		G62	**5,658 €**
	Capacitor	C60	**2,913 €**

With advanced UMI

Sepam series 60	Application	Type	
	Substation	S60	**2,708 €**
		S62	**4,468 €**
	Transformer	T60	**3,427 €**
		T62	**4,787 €**
	Motor	M61	**3,722 €**
	Generator	G60	**3,604 €**
		G62	**5,641 €**
	Capacitor	C60	**3,059 €**

With mimic-based UMI

Sepam series 60	Application	Type	
	Substation	S60	**2,970 €**
		S62	**4,730 €**
	Transformer	T60	**3,688 €**
		T62	**5,049 €**
	Motor	M61	**3,984 €**
	Generator	G60	**3,866 €**
		G62	**5,903 €**
	Capacitor	C60	**3,354 €**

Ready-to-use base unit
Sepam series 80

For price calculation, you must add:

- **the ready-to-use base unit**
- **the relevant accessories and/or the TCP/IP firmware option.**

Base unit

Without UMI

Sepam series 80	Application	Type	DO Price
	Substation	S80	**2,754 €**
		S81	**3,461 €**
		S82	**5,135 €**
		S84	**6,232 €**
	Transformer	T81	**4,247 €**
		T82	**5,921 €**
		T87	**6,538 €**
	Motor	M81	**3,997 €**
		M87	**5,420 €**
		M88	**6,862 €**
	Generator	G82	**6,498 €**
		G87	**6,894 €**
		G88	**7,693 €**
	Busbar	B80	**3,270 €**
		B83	**4,323 €**
	Capacitor	C86	**3,720 €**

With advanced UMI

Sepam series 80	Application	Type	
	Substation	S80	**2,971 €**
		S81	**3,671 €**
		S82	**5,327 €**
		S84	**6,413 €**
	Transformer	T81	**4,448 €**
		T82	**6,104 €**
		T87	**6,697 €**
	Motor	M81	**4,200 €**
		M87	**5,600 €**
		M88	**6,964 €**
	Generator	G82	**6,540 €**
		G87	**6,663 €**
		G88	**7,626 €**
	Busbar	B80	**3,355 €**
		B83	**4,434 €**
	Capacitor	C86	**3,909 €**

With mimic-based UMI

Sepam series 80	Application	Type	
	Substation	S80	**3,396 €**
		S81	**4,096 €**
		S82	**5,752 €**
		S84	**6,838 €**
	Transformer	T81	**4,874 €**
		T82	**6,530 €**
		T87	**7,972 €**
	Motor	M81	**4,625 €**
		M87	**6,004 €**
		M88	**7,389 €**
	Generator	G82	**6,965 €**
		G87	**7,045 €**
		G88	**8,007 €**
	Busbar	B80	**3,835 €**
		B83	**4,859 €**
	Capacitor	C86	**4,390 €**

Accessories
Sepam series 10, 20, 40, 60, 80

Mounting accessories

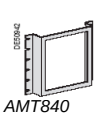
AMT840

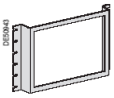
AMT880

		Reference	DO Price
Mounting plate for Sepam series 20/40 base unit and MCS025 module	AMT840	**59670**	**185 €**
Mounting plate for Sepam series 60/80 base unit	AMT880	**59706**	**131 €**
Blanking plate	AMT820	**59699**	**74 €**

Sealing accessories

AMT852

Sepam series 20 - 40 - 60- 80		Reference	
Sealing accesory for Sepam series 20/40 base unit	AMT852	**59639**	**103 €**
Sealing accessory for Sepam series 60/80 base unit	AMT852	**59639**	**103 €**

Software tools

Sepam series 20 - 40 - 60- 80		Reference	
PC connection cord - RS232 connection	CCA783	**59664**	**52 €**
PC connection cord - USB connection	CCA784	**59671**	**106 €**
Configuration software CD	CD SFT2841	**59679**	**36 €**
Logipam software CD	CD SFT 2885	**59727**	**36 €**

Input/output modules

MES114

MES120

		Reference	
Sepam series 20 - 40			
10 inputs + 4 outputs 24-250 V DC	MES114	**59646**	**368 €**
10 inputs + 4 outputs 110-125 V DC / V AC	MES114E	**59651**	**555 €**
10 inputs + 4 outputs 220-250 V DC / V AC	MES114F	**59652**	**704 €**
Sepam series 60 - 80			
14 inputs + 6 outputs 24-250 V DC	MES120	**59715**	**775 €**
14 inputs + 6 outputs 220-250 V DC	MES120G	**59716**	**919 €**
14 inputs + 6 outputs 110-125 V DC	MES120H	**59722**	**990 €**

Remote modules and cords

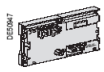
MSA141

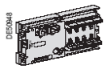
MET148-2

DSM303

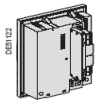
MCSU25

Sepam series 20 - 40 - 60- 80		Reference	
Remote modules			
8 temperature sensors module	MET148-2	**59641**	**785 €**
Analog output module	MSA141	**59647**	**518 €**
Remote advanced UMI module	DSM303	**59608**	**393 €**
Remote module connection cord L = 0.6 m	CCA770	**59660**	**33 €**
Remote module connection cord L = 2 m	CCA772	**59661**	**37 €**
Remote module connection cord L = 4 m	CCA774	**59662**	**50 €**
Synchro-check module			
Synchro-check module (with CCA785 connection cord)	MCS025	**59712**	**1,408 €**
MCS025 connection cord	CCA785	**59665**	**34 €**

Communication accessories

ACE937

ACE949-2

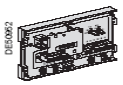
ACE959

ACE 909-2

ACE969TP-2

ACE969FO-2

IEC 61850

Sepam series 20 - 40 - 60- 80		Reference	
Sepam communication interfaces			
2-wire RS 485 network interface (CCA612 not included)	ACE949-2	**59642**	**157 €**
4-wire RS 485 network interface (CCA612 not included)	ACE959	**59643**	**178 €**
Fiber optic interface (CCA612 not included)	ACE937	**59644**	**363 €**
Communication cord L = 3 m	CCA612	**59663**	**44 €**
2-wire RS 485 multiprotocol network interface (CCA612 not included)	ACE969TP-2	**59723**	**513 €**
Fiber optic multiprotocol network interface (CCA612 not included)	ACE969FO-2	**59724**	**798 €**
IEC61850 Sepam Server(with surge protection)	ECI850	**59638**	**1,197 €**
10/100 baseTX TCP/IP interface *	ACE850TP	**59658**	**779 €**
Converters			
RS 232 / RS 485 converter	AC909-2	**59648**	**1,814 €**
RS 485 / RS 485 interface (AC)	ACE919CA	**59649**	**1,444 €**
RS 485 / RS 485 interface (DC)	ACE919CC	**59650**	**850 €**

Sensors

CSH120 & CSH200

		Reference	
Core balance CTs			
Residual current sensor Ø 120	CSH120	**59635**	**233 €**
Residual current sensor Ø 200	CSH200	**59636**	**363 €**
Interposing ring CT for residual current input	CSH30	**59634**	**96 €**
Core balance CT interface	ACE990	**59672**	**800 €**
1/5A CT CURRENT CONNECTOR CCA630	CCA630	**59630**	**187 €**
1A5A CT,I0 CURRENT CONNECTOR		**59629**	**234 €**
LPCT accessories (1)			
LPCT injection adapter	ACE917	**59667**	**3,623 €**
Remote LPCT test plug	CCA613	**59666**	**396 €**
	ACE850TP	**59658**	**779 €**
	ECI850	**59638**	**1,197 €**
	CCA614	**59751**	**35 €**

(1) not available for Sepam serie 10
*** for Sepam series 40, 60 & 80 only**

Sepam 60 & 80 Series

+ Mimic Based UMI

Now

+ View Switchgear status

+ Logipam Programming for 80 Series

+ Local/Remote Mode Selection Key

+ Local Control of Switchgear

System integrator of Schneider Electric

Front View of Sepam 20 & 40

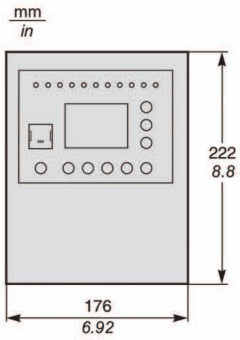

Cut-out of Sepam 20 & 40

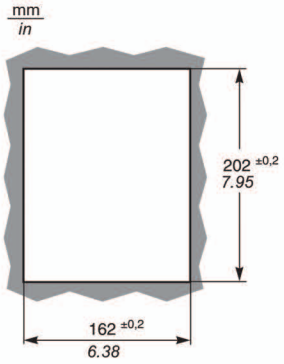

Front View of Sepam 60 & 80

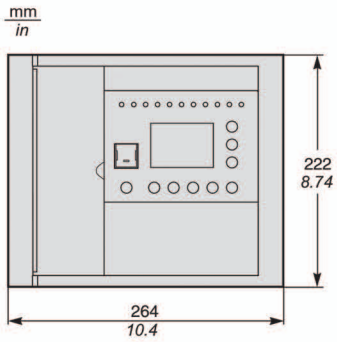

Cut-out of Sepam 60 & 80

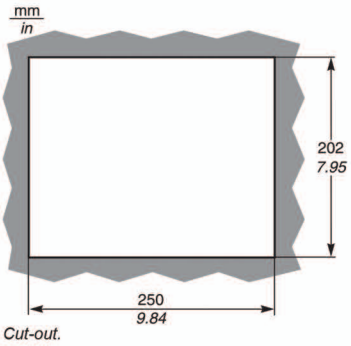

Dimensions for Sepam 100LD

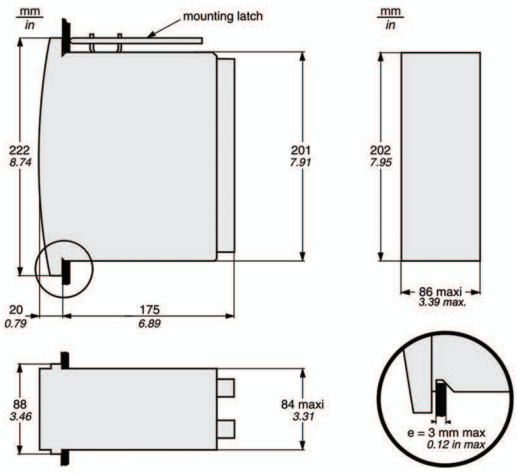

Dimensions for Sepam10

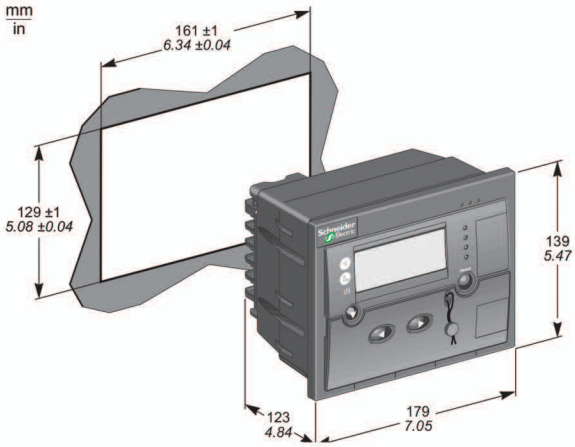

خدمات قابل ارائه توسط **پیشتاز تامین تجهیز غرب** به عنوان System Integrator مورد تایید شرکت **اشنایدرالکتریک**،
در زمینه رله و حفاظت شامل موارد زیر می‌باشد:

- تامین رله‌های حفاظتی اشنایدر الکتریک شامل، VAMP ، Sepam و MiCOM (Areva,Alstom سابق) به صورت تحویل فوری.
- ارائه مشاوره برای انتخاب مناسب‌ترین رله حفاظتی و ملحقات مورد نیاز با توجه به نیاز پروژه.
- انجام مطالعات حفاظتی و ارائه راهکار و مستندات فنی حفاظتی.
- نصب، راه اندازی، تست و تحویل‌دهی پروژه‌های حفاظتی.
- پیکربندی و انجام تنظیمات رله‌های حفاظتی
- ارائه راهکارهای نوسازی (Retrofit) سیستم‌های حفاظتی با کم‌ترین تغییرات مکانیکال و الکتریکال.
- جایگزینی رله‌های قدیمی از هر سازنده، با نسل جدید رله‌های حفاظتی شرکت اشنایدر الکتریک (Sepam, MiCOM, VAMP).
- Comissioning پست‌های انتقال و توزیع و پروژه‌های حفاظتی.
- برگزاری دوره‌های آموزشی در لابراتوار شرکت یا محل سایت در زمینه‌های:
  - آموزش رله های حفاظتی Sepam, MiCOM, VAMP
  - آموزش تست رله های حفاظتی با دستگاه Omicron

Telemecanique — تله مکانیک ایران

شماره:SA-15-MM-4154-DO
تاریخ:2015/April/21

به نام خدا

موضوع: معرفی نامه

مورد توجه مشتریان محترم شرکت اشنایدر الکتریک

با سلام

احتراما" همانگونه که مستحضرید،شرکت اشنایدر الکتریک در ۱۳۰ کشور جهان دارای شعبه می باشد،که با توجه به شرایط منطقه ای،محصولات متعددی تولید و عرضه می نماید.نکته حایز اهمیت اینکه:

محصولات تولیدی کشورهای ،آسیایی و ایران تحت مدیریت سیستم کنترل کیفیت فرانسه می باشند و هیچ تفاوت کیفی با یکدیگر ندارند.

لذا به اطلاع می رساند،کلیه محصولات شرکت اشنایدر الکتریک از جمله رله های و Micom, Vamp وSEPAM،با هولوگرام مشخص در پایین،که از طریق System Integrator رسمی این شرکت ، شرکت پیشتاز تامین تجهیز غرب،با مدیریت جناب آقای مهندس افشار عرضه می گردند،ساخت شرکت اشنایدر الکتریک می باشد.

اعتبار این گواهینامه تا تاریخ ۳۱ دسامبر ۲۰۱۵ میلادی می باشد.

نمومه هولوگرام رسمی:

IRAN
AA01234

ضمنا" این گواهینامه صرفا" جهت معرفی نماینده فروش محصولات صنعتی شرکت اشنایدر الکتریک می باشد و هیچگونه اعتباری جهت استفاده برای ورود کالا به کشور ندارد.

با سپاس و تجدید احترام
شرکت تله مکانیک ایران

Schneider Electric
تله مکانیک ایران
گروه اشنایدر الکتریک
تهران-خیابان ولیعصر-خیابان شهید فیاضی(فرشته)
بن بست شهریار - شماره ۲
تلفن: ۲۲۰۱۵۳۰۰ فکس: ۲۲۰۱۵۳۱۱
صندوق پستی: ۱۹۳۹۵-۱۳۱۱
بخش فروش نمایندگان

Head Office : Telemecanique Iran
No.2, Shahriar Alley, Fereshteh st.,
Vali-e-Asr Ave., Tehran 1965938511 Iran
P.O.Box : 19615 - 311
Tel. : 220 153 00
Fax : 220 153 11
ir-info@ir.schneider-electric.com

Schneider Electric

دفتر مرکزی : شرکت تله مکانیک ایران
تهران-خیابان ولیعصر-خیابان شهید فیاضی(فرشته)
بن بست شهریار-شماره ۲ کد پستی : ۱۹۶۵۹۳۸۵۱۱
صندوق پستی : ۳۱۱-۱۹۶۱۵
تلفن : ۲۲۰ ۱۵۳ ۰۰
دورنگار: ۲۲۰ ۱۵۳ ۱۱

شرکت پیشتاز تامین تجهیز غرب
تهران، تهرانسر، بلوار گلها، شماره ۵۹
تلفن: ۴۴۵۳ ۸۶۹۳ - ۴۴۵۱ ۸۸۰۹
فکس: ۴۴۵۲ ۴۳۸۳

Pishtaz Tamin Tajhiz Gharb
info@pishtaz-gharb.com
www.pishtaz-gharb.com